WATER PROCESS SOLUTIONS

Encore® 700 Curves Manual

Sales Literature No. WPSSL0101

Table of Contents

Table of Contents	Dwg No./ Config Code No.
Encore® 700 Pump Curves	
1-3/8”	E7A
2”	E7B
3”	E7C
4”	E7D
5”	E7E
6-1/2”	E7Q
Encore® 700 Dimensional Drawings	
1-3/8”	WPS-E7A & WPS-E7A-ESP
2”	WPS-E7B & WPS-E7B-ESP
3”	WPS-E7C & WPS-E7C-ESP
4”	WPS-E7D & WPS-E7D-ESP
5”	WPS-E7E & WPS-E7E-ESP
6-1/2”	WPS-E7Q & WPS-E7Q-ESP
EPS Installation Wiring Drawings	
Installation Wiring	40.300.131.010
Installaation Wiring - SFC-SC Controller	40.300.131.020

WPS Ltd. Encore 700 Diaphragm Metering Pump 1 3/8” (35 mm) Head 50 Hz Pump Curve

NOTE: All figures relate to 12 BAR pressure

PUMP CONFIGURATION CODE: E7A

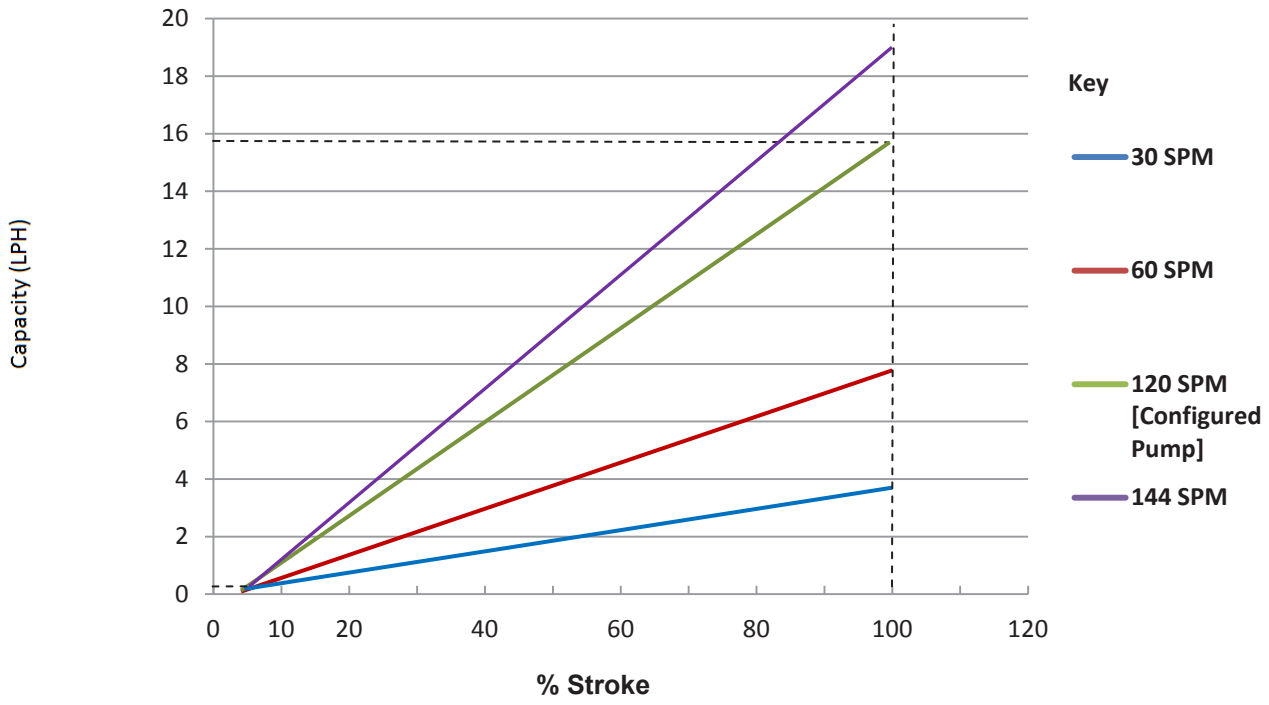

SPM (Strokes Per Minute)	Capacity LPH (Litres per Hour) at 100% Stroke
30	3.9
60	7.9
120	15.8
144	18.9

PUMP CURVE NOTES:

1. PUMP CONFIGURED WITH PVC HEAD, VALVES AND PTFE VALVE BALLS.
2. DATA APPLIES TO WATER AT 16°C (61°F) AND 3 FT SUCTION LIFT CONDITIONS
3. PUMP CURVES ARE NORMALISED
4. THIS IS A TYPICAL REPRESENTATION OF PUMP CAPACITIES, HOWEVER ACTUAL PERFORMANCE MAY VARY BASED ON VARIUOS FACTORS SUCH AS INSTALLATION CONDITIONS, LIQUID PUMPED, SUCTION HEAD, DISCHARGE PRESSURE, VALVE TYPE AND CONFIGURATIONS, PIPE LENGTHS/SCHEDULE AND OTHER LOCAL INSTALLATION CONDITIONS. IT IS RECOMMENDED THAT THE USER DOES PUMP CALIBRATION ONSITE DURING START UP. ALWAYS REFER TO CATALOGUE CAPACITIES PRIOR TO SIZING AND SELECTING APPROPRIATE PUMP.

WATER PROCESS SOLUTIONS

Unit 10
Mill Hall Business Estate
Aylesford
Kent
ME20 7JZ

www.waterprocesssolutions.com

Phone: +44 (0) 1622719945
email: enquiries@waterprocesssolutions.com

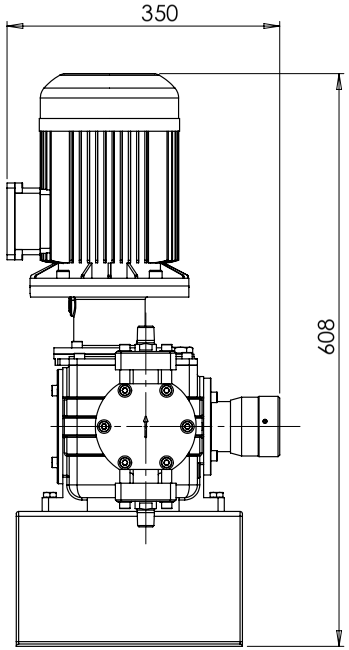

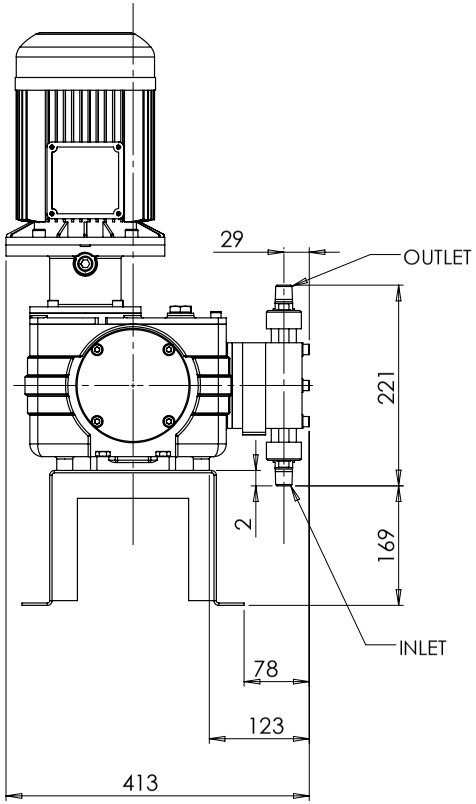

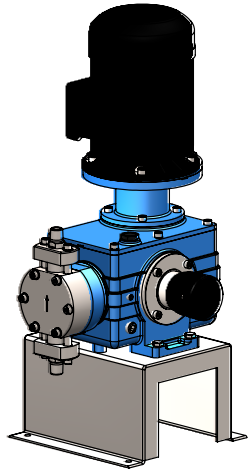

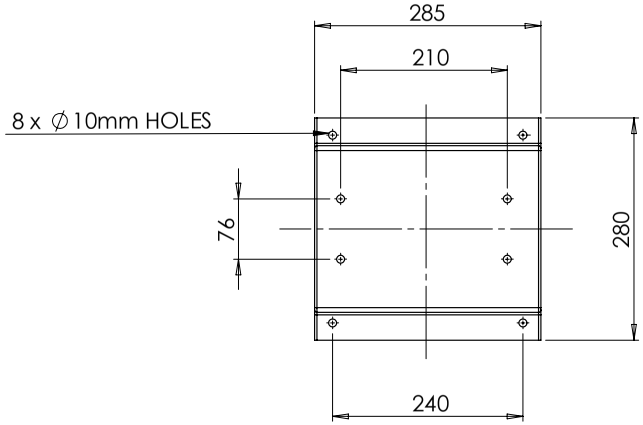

PUMP HEAD SIZE [MM]	INLET/OUTLET CONNECTIONS		WEIGHT [kg.]
	'PLAIN SOCKET'	'BSP'	
35	1/2" NB	1/2" BSP	50

THIRD ANGLE PROJECTION

	NAME	DATE
DRAWN BY	J.W	25/11/2016
CHK'D BY	T.F	25/11/2016
APPV'D BY	T.F	25/11/2016

PUMP HEAD CONFIG. E7A - [1-3/8 INCH] [35MM]

TITLE: ENCORE 700 DIAPHRAGM PUMP - SIMPLEX MANUAL SPACE REQUIREMENTS

Water Process Solutions

UNLESS OTHERWISE SPECIFIED: DIMENSIONS: ALL IN MM. SURFACE FINISH: TOLERANCES: +/- 0.1 mm

MATERIAL: **WEIGHT:** 50kg

ISS NO. 01

PROJECT NO.

SCALE: 1 / 6

DWG NO. WPS-E7A

REVISION DATE: 25/11/2016

SHEET 1 OF 1

A3

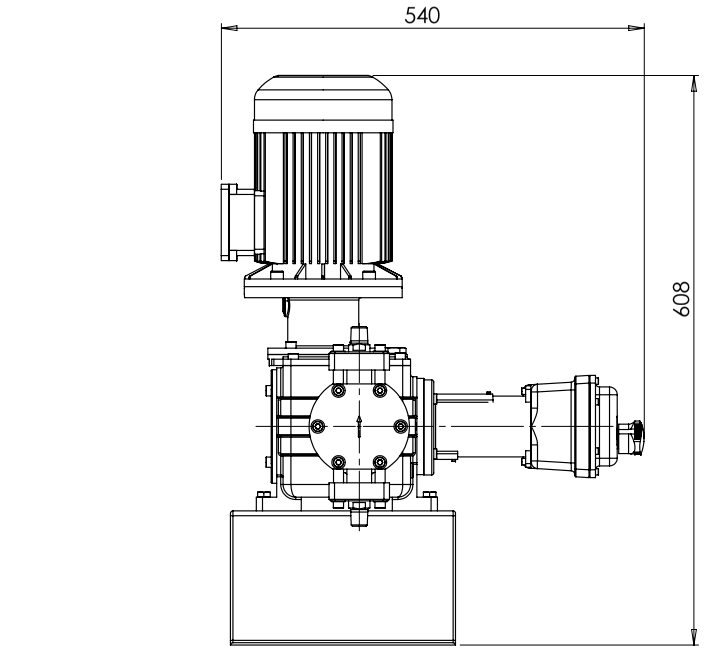

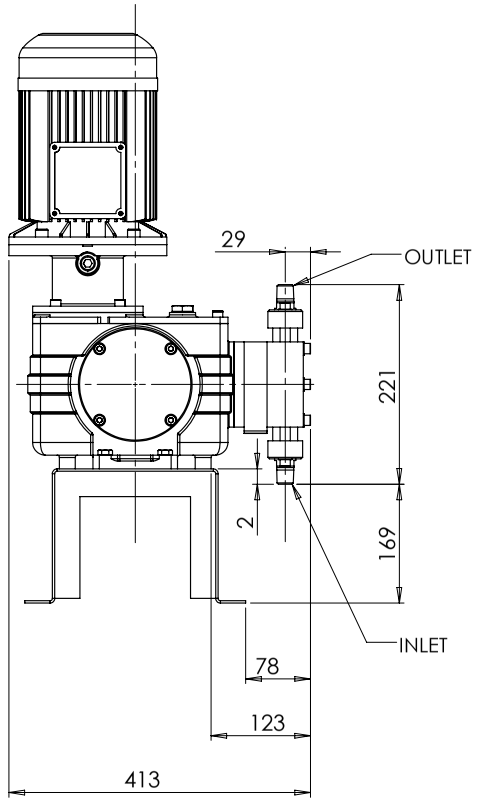

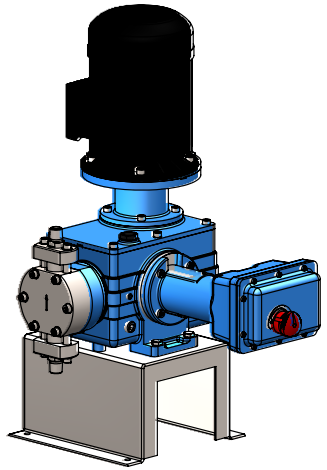

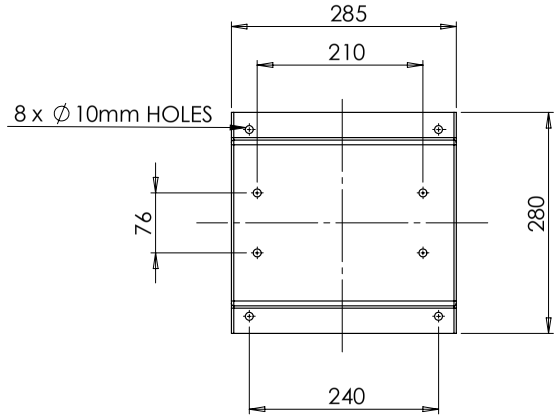

PUMP HEAD SIZE [MM]	INLET/OUTLET CONNECTIONS		WEIGHT [kg.]
	'PLAIN SOCKET'	'BSP'	
35	1/2" NB	1/2" BSP	50

THIRD ANGLE PROJECTION

	NAME	DATE
DRAWN BY	J.W	25/11/2016
CHK'D BY	T.F	25/11/2016
APP'V'D BY	T.F	25/11/2016

PUMP HEAD CONFIG.
E7A - [1-3/8 INCH] [35MM]

TITLE:
ENCORE 700 DIAPHRAGM PUMP - SIMPLEX ESP SPACE REQUIREMENTS

Water Process Solutions

UNLESS OTHERWISE SPECIFIED:
DIMENSIONS: ALL IN MM.
SURFACE FINISH:
TOLERANCES: +/ - 0.1 mm

MATERIAL: [REFER TO CONFIG. BoM]
WEIGHT: 50 kg

ISS NO. 01

PROJECT NO.

SCALE: 1 / 6

DWG NO. WPS-E7A-ESP

REVISION DATE: 25/11/2016

SHEET 1 OF 1

A3

WPS Ltd. Encore 700 Diaphragm Metering Pump 2” (50 mm) Head 50 Hz Pump Curve

NOTE: All Figures relate to 12 BAR pressure

PUMP CONFIGUARTION CODE: E7B

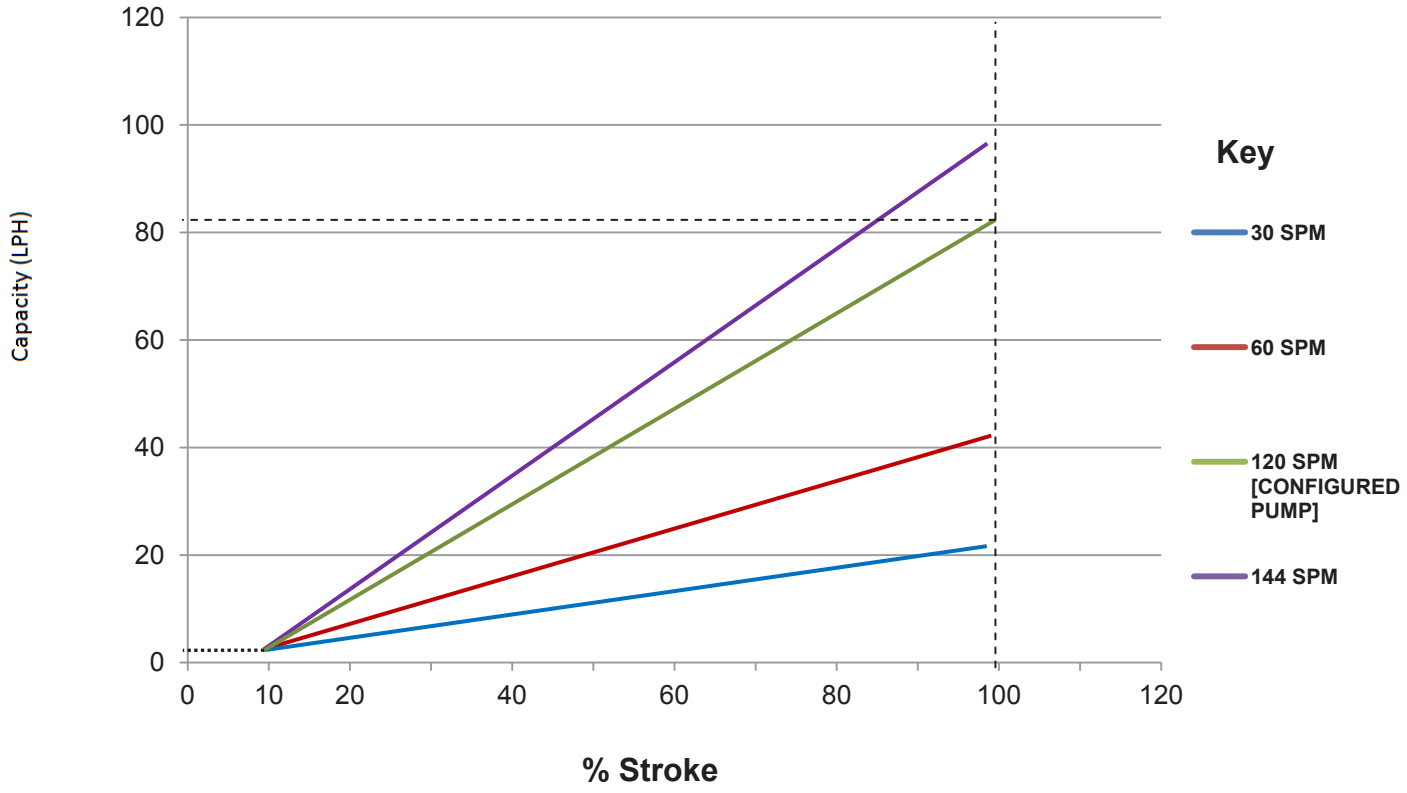

SPM (Strokes Per Minute)	Capacity LPH (Litres per Hour) at 100%
30	20.5
60	41
120	82
144	98.4

PUMP CURVE NOTES:

1. PUMP CONFIGURED WITH PVC HEAD, VALVES AND PTFE VALVE BALLS.
2. DATA APPLIES TO WATER AT 16°C (61°F) AND 3 FT SUCTION LIFT CONDITIONS
3. PUMP CURVES ARE NORMALISED
4. THIS IS A TYPICAL REPRESENTATION OF PUMP CAPACITIES, HOWEVER ACTUAL PERFORMANCE MAY VARY BASED ON VARIUOS FACTORS SUCH AS INSTALLATION CONDITIONS, LIQUID PUMPED, SUCTION HEAD, DISCHARGE PRESSURE, VALVE TYPE AND CONFIGURATIONS, PIPE LENGTHS/SCHEDULE AND OTHER LOCAL INSTALLATION CONDITIONS. IT IS RECOMMENDED THAT THE USER DOES PUMP CALIBRATION ONSITE DURING START UP. ALWAYS REFER TO CATALOGUE CAPACITIES PRIOR TO SIZING AND SELECTING APPROPRIATE PUMP.

WATER PROCESS SOLUTIONS

Unit 10
Mill Hall Business Estate
Aylesford
Kent
ME20 7JZ

www.waterprocesssolutions.com

Phone: +44 (0) 1622719945
email: enquiries@waterprocesssolutions.com

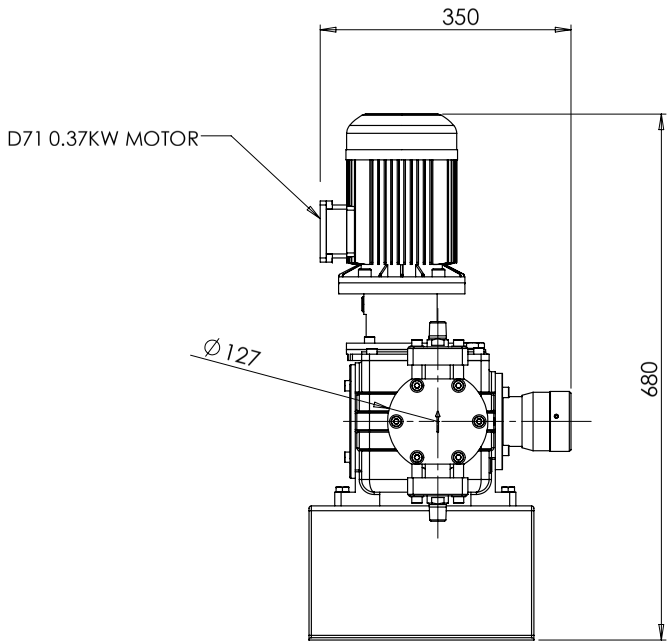

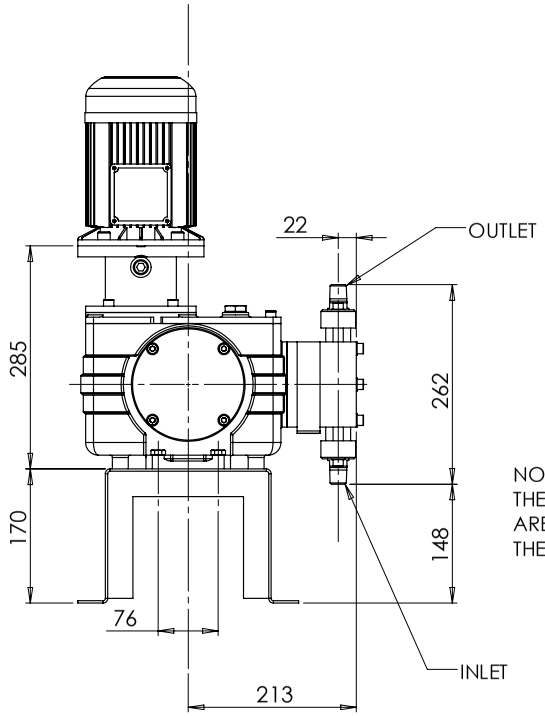

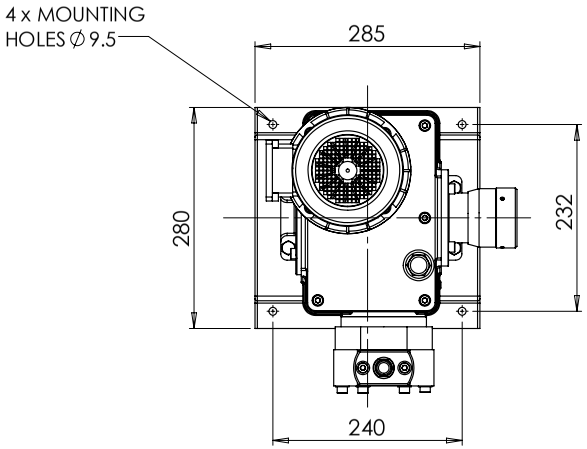

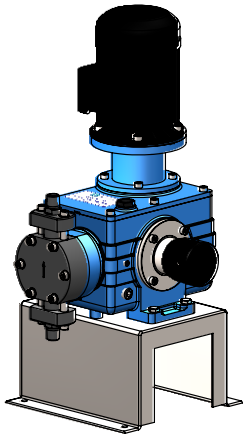

NOTE: THE DATUM POINT ON THE HEAD IS THE FLAT SURFACE FACE. THE DIMENSIONS ARE TAKEN FROM THIS POINT AND NOT FROM THE HEAD OF THE BOLT.

PUMP HEAD SIZE [MM]	INLET/OUTLET CONNECTIONS		WEIGHT [kg.]
	'PLAIN SOCKET'	'BSP'	
50	1/2" NB	1/2" BSP	52

THIRD ANGLE PROJECTION

	NAME	DATE
DRAWN BY	J.W	21/04/2017
CHK'D BY	T.F	21/04/2017
APP'V'D BY	T.F	21/04/2017

PUMP HEAD CONFIG.

UNLESS OTHERWISE SPECIFIED: DIMENSIONS: ALL IN MM. SURFACE FINISH: TOLERANCES: +/ - 0.1 mm

TITLE: ENCORE 700 DIAPHRAGM PUMP - SIMPLEX MANUAL SPACE REQUIREMENTS

MATERIAL: [Refer to Config. BoM]

WEIGHT: 52 Kg

COMPANY RECIPIENT.

ISS NO. 01

SCALE: 1 / 6

Water Process Solutions

DWG NO. WPS-E7BM

REVISION DATE: 21/04/2017

SHEET 1 OF 1

A3

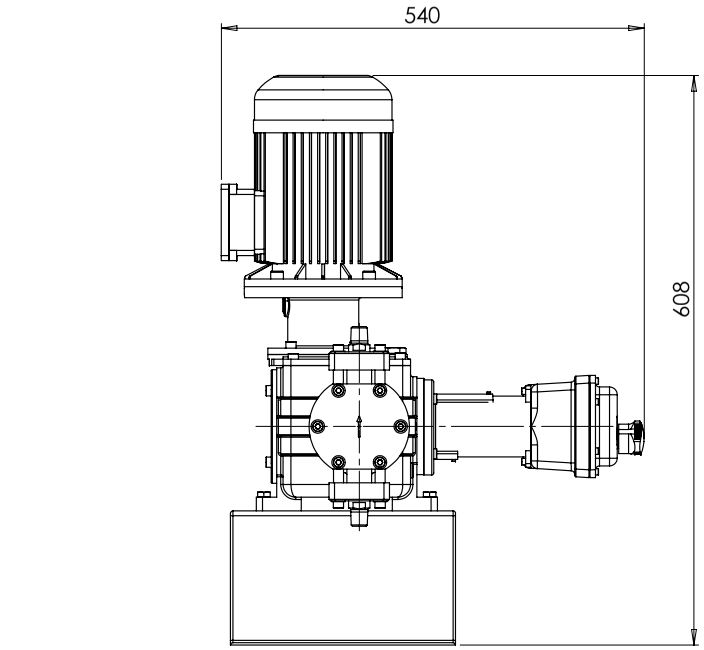

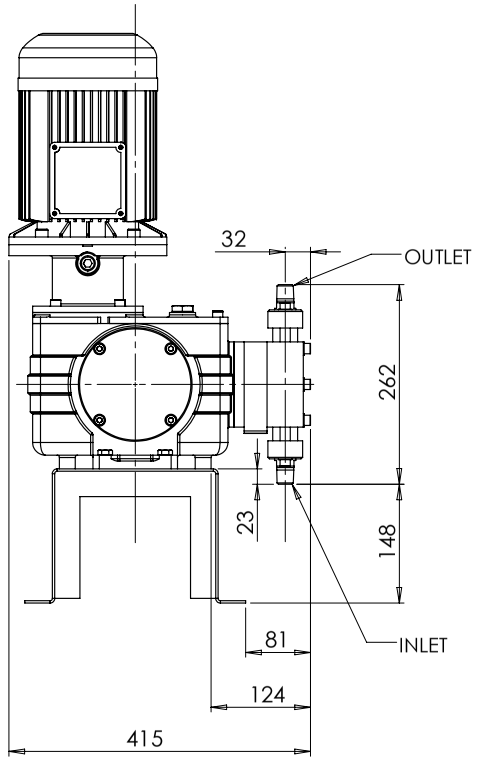

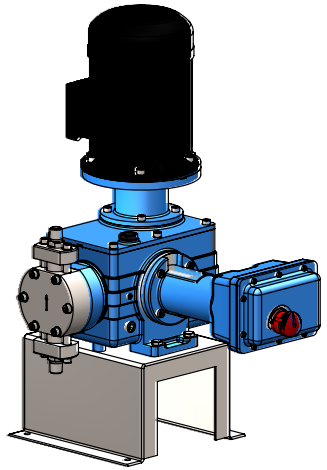

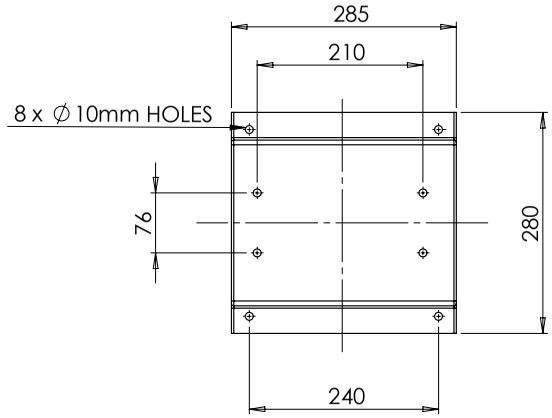

PUMP HEAD SIZE [MM]	INLET/OUTLET CONNECTIONS		WEIGHT [kg.]
	'PLAIN SOCKET'	'BSP'	
50	1/2" NB	1/2" BSP	52

THIRD ANGLE PROJECTION

	NAME	DATE
DRAWN BY	J.W	25/11/2016
CHK'D BY	T.F	25/11/2016
APP'V'D BY	T.F	25/11/2016

PUMP HEAD CONFIG.
E7B - [2 INCH]
[50MM]

TITLE:
ENCORE 700 DIAPHRAGM PUMP
- SIMPLEX ESP SPACE REQUIREMENTS

Water Process Solutions

UNLESS OTHERWISE SPECIFIED:
DIMENSIONS: ALL IN MM.
SURFACE FINISH:
TOLERANCES: +/ - 0.1 mm

MATERIAL: [REFER TO CONFIG. BoM]
WEIGHT: 52 kg

ISS NO. 01

PROJECT NO.

SCALE: 1 / 6

DWG NO. WPS-E7B-ESP

REVISION DATE: 25/11/2016

SHEET 1 OF 1

A3

WPS Ltd. Encore 700 Diaphragm Metering Pump 3” (75 mm) Head 50 Hz Pump Curve

NOTE: All Figures relate to 10 BAR pressure

PUMP CONFIGURATION CODE: E7C

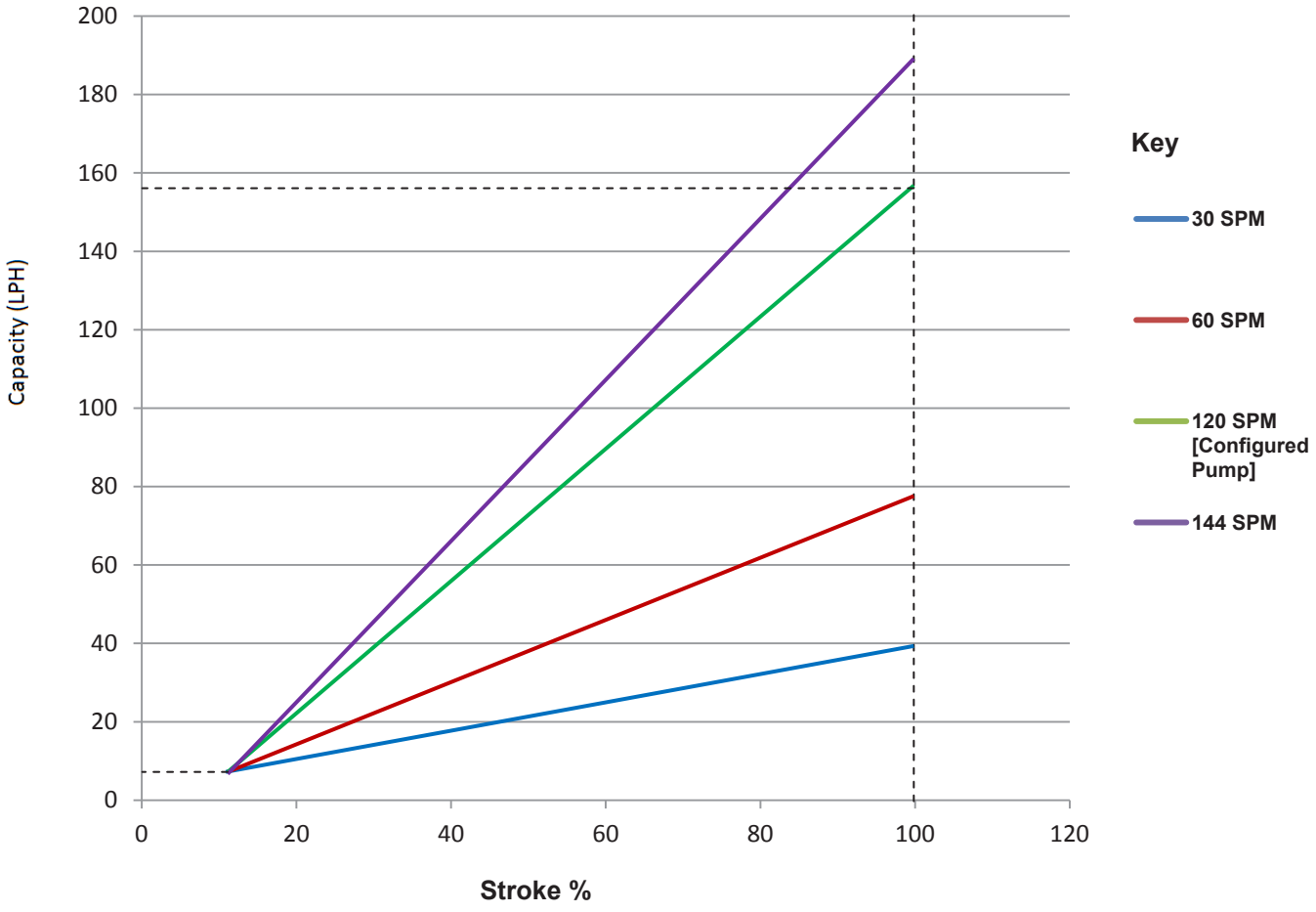

SPM (Strokes Per Minute)	Capacity LPH (Litres per Hour) at 100%
30	39.5
60	79
120	158
144	190

PUMP CURVE NOTES:

1. PUMP CONFIGURED WITH PVC HEAD, VALVES AND PTFE VALVE BALLS.
2. DATA APPLIES TO WATER AT 16°C (61°F) AND 3 FT SUCTION LIFT CONDITIONS
3. PUMP CURVES ARE NORMALISED
4. THIS IS A TYPICAL REPRESENTATION OF PUMP CAPACITIES, HOWEVER ACTUAL PERFORMANCE MAY VARY BASED ON VARIUOS FACTORS SUCH AS INSTALLATION CONDITIONS, LIQUID PUMPED, SUCTION HEAD, DISCHARGE PRESSURE, VALVE TYPE AND CONFIGURATIONS, PIPE LENGTHS/SCHEDULE AND OTHER LOCAL INSTALLATION CONDITIONS. IT IS RECOMMENDED THAT THE USER DOES PUMP CALIBRATION ONSITE DURING START UP. ALWAYS REFER TO CATALOGUE CAPACITIES PRIOR TO SIZING AND SELECTING APPROPRIATE PUMP.

WATER PROCESS SOLUTIONS

Unit 10
Mill Hall Business Estate
Aylesford
Kent
ME20 7JZ

www.waterprocesssolutions.com

Phone: +44 (0) 1622719945
email: enquiries@waterprocesssolutions.com

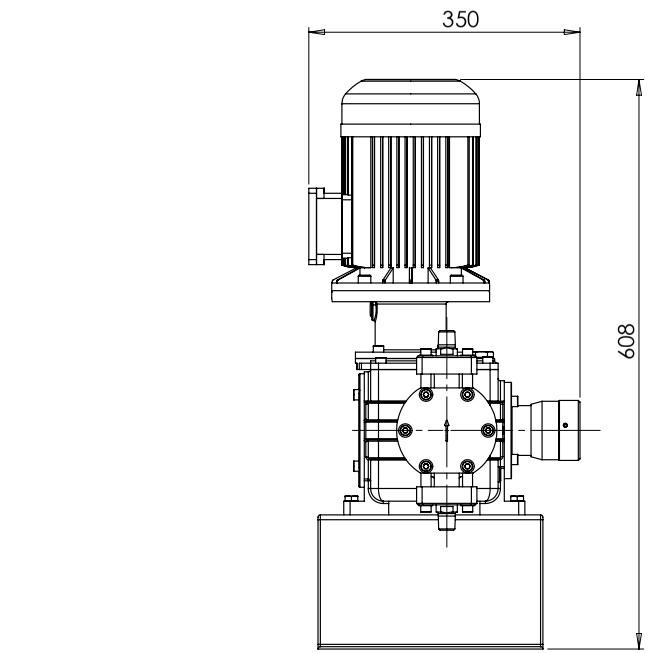

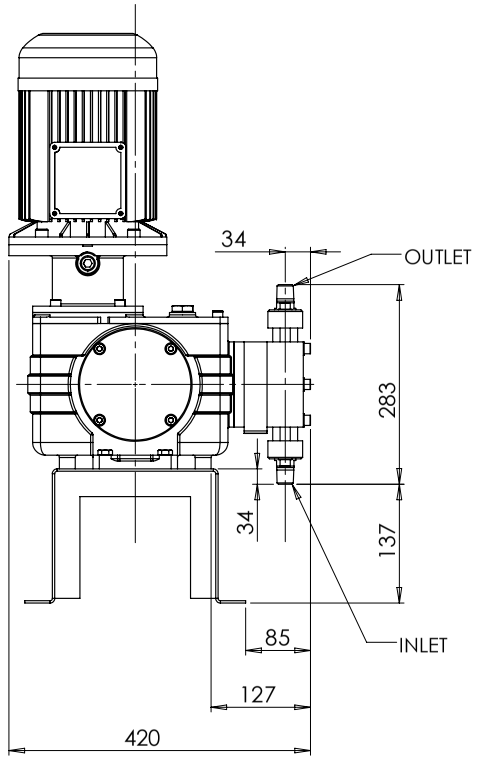

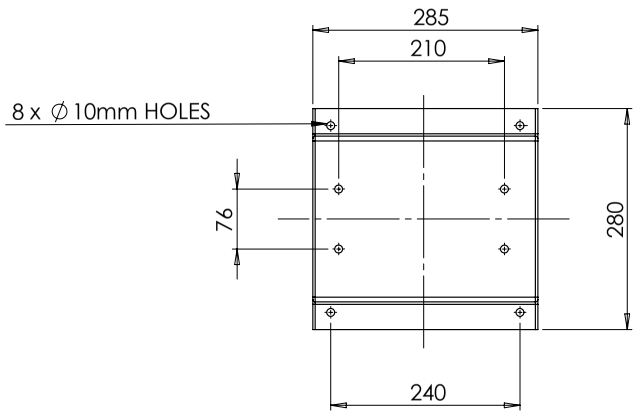

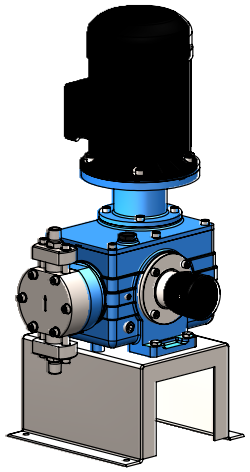

PUMP HEAD SIZE [MM]	INLET/OUTLET CONNECTIONS		WEIGHT [kg.]
	'PLAIN SOCKET'	'BSP'	
75	1/2" NB	1/2" BSP	54

THIRD ANGLE PROJECTION

	NAME	DATE
DRAWN BY	J.W	25/11/2016
CHK'D BY	T.F	25/11/2016
APP'V'D BY	T.F	25/11/2016

PUMP HEAD CONFIG. E7C - [3 INCH] [75MM]

TITLE: ENCORE 700 DIAPHRAGM PUMP - SIMPLEX MANUAL SPACE REQUIREMENTS

Water Process Solutions

UNLESS OTHERWISE SPECIFIED: DIMENSIONS: ALL IN MM. SURFACE FINISH: TOLERANCES: +/ - 0.1 mm

MATERIAL: [Refer to Config. BoM]

WEIGHT: 54 Kg

ISS NO. 01

PROJECT NO.

SCALE: 1 / 6

DWG NO. WPS-E7C

REVISION DATE: 25/11/2016

SHEET 1 OF 1

A3

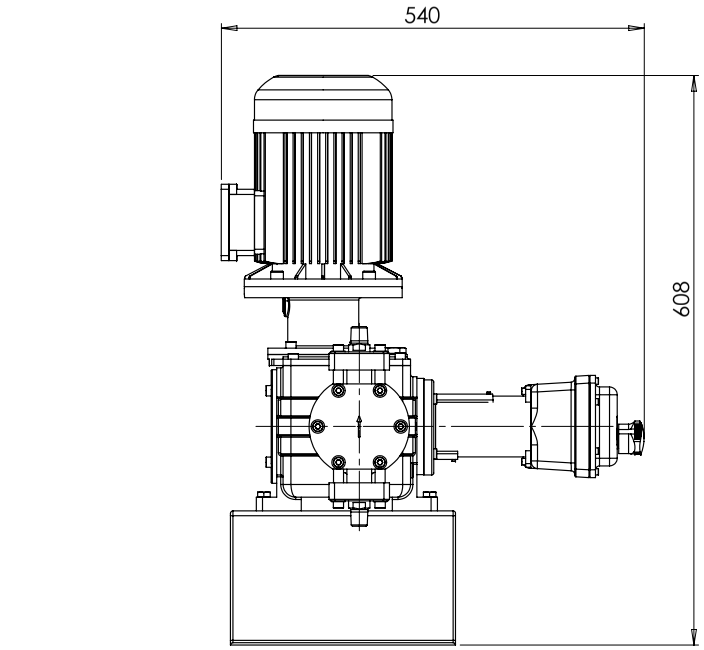

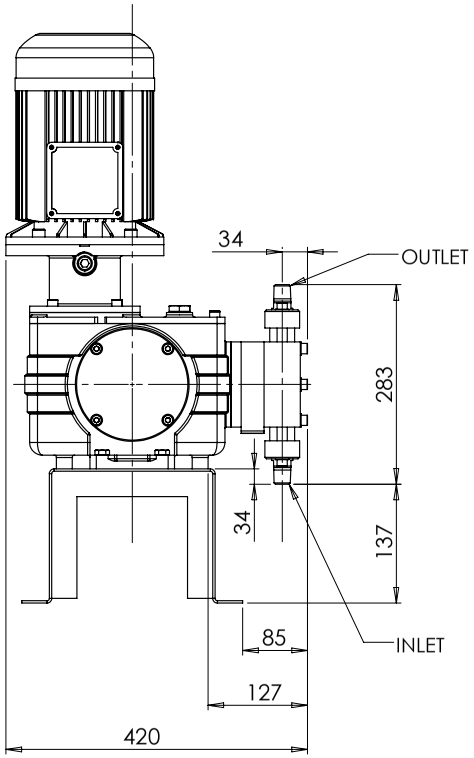

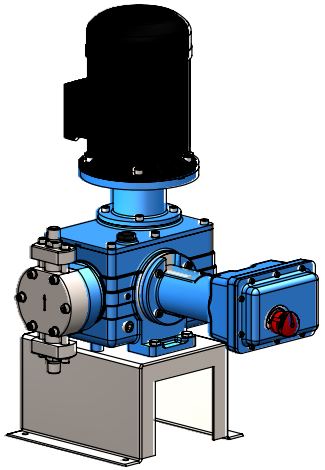

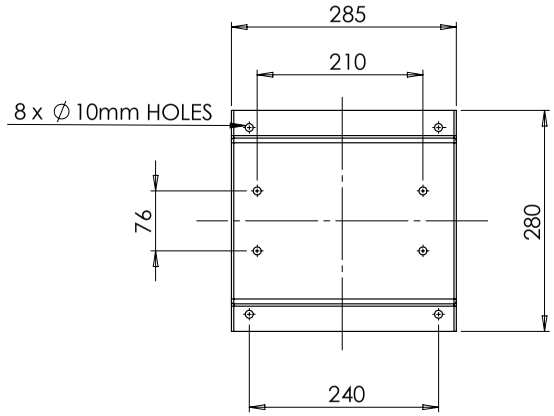

PUMP HEAD SIZE [MM]	INLET/OUTLET CONNECTIONS		WEIGHT [kg.]
	'PLAIN SOCKET'	'BSP'	
75	1/2" NB	1/2" BSP	54

THIRD ANGLE PROJECTION

	NAME	DATE
DRAWN BY	J.W	25/11/2016
CHK'D BY	T.F	25/11/2016
APP'V'D BY	T.F	25/11/2016

PUMP HEAD CONFIG.
E7C - [3 INCH]
[75MM]

TITLE:
ENCORE 700 DIAPHRAGM PUMP
- SIMPLEX ESP SPACE REQUIREMENTS

Water Process Solutions

UNLESS OTHERWISE SPECIFIED:
DIMENSIONS: ALL IN MM.
SURFACE FINISH:
TOLERANCES: +/ - 0.1 mm

MATERIAL: [REFER TO CONFIG. BoM]
WEIGHT: 54 kg

ISS NO. 01

PROJECT NO.

SCALE: 1 / 6

DWG NO. WPS-E7C-ESP

REVISION DATE: 25/11/2016

SHEET 1 OF 1

A3

WPS Ltd. Encore 700 Diaphragm Metering Pump 4” (100 mm) Head 50 Hz Pump Curve

NOTE: All Figures relate to 9 BAR pressure

PUMP CONFIGURATION CODE: E7D

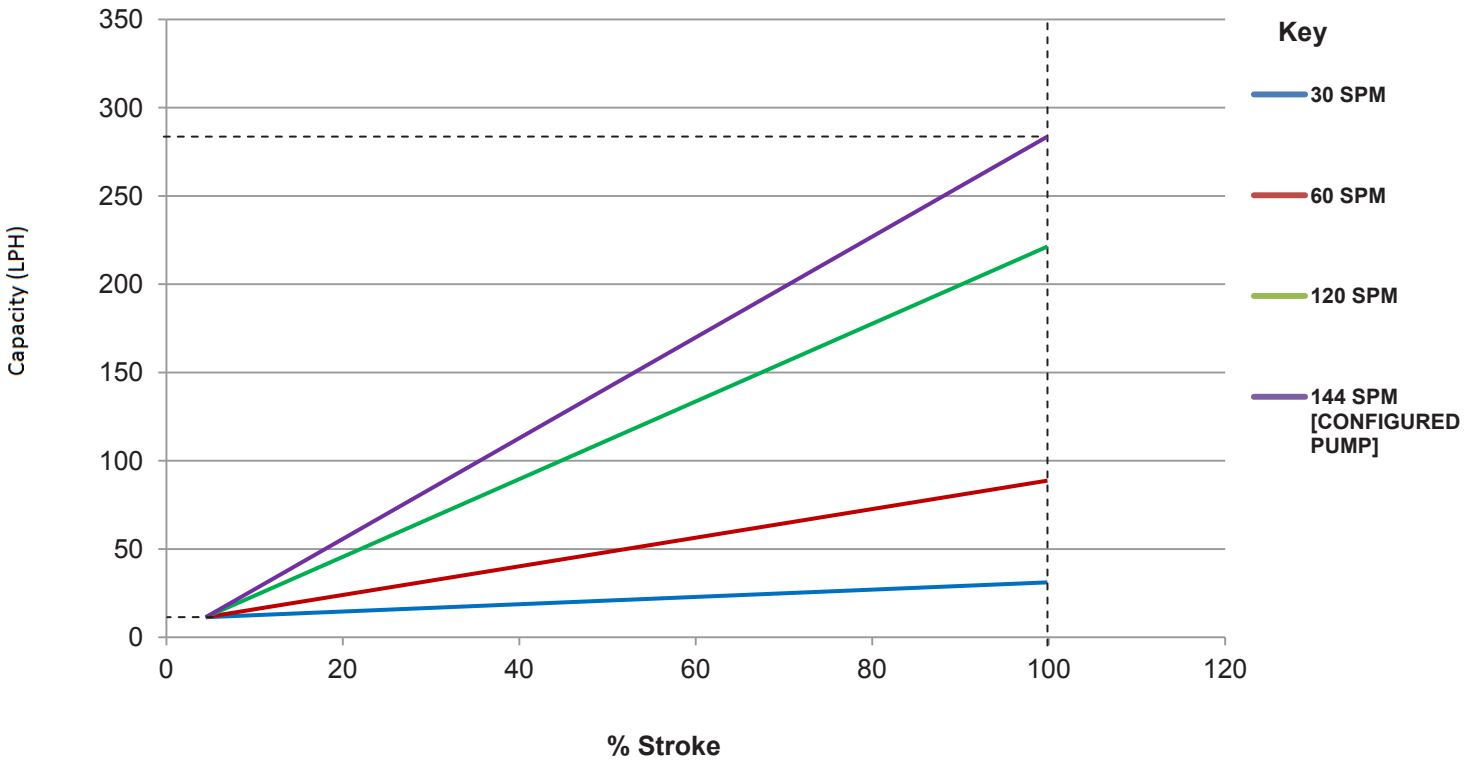

SPM (Strokes Per Minute)	Capacity LPH (Litres per Hour) at 100%
30	60.7
60	121.4
120	245
144	291.4

PUMP CURVE NOTES:

1. PUMP CONFIGURED WITH PVC HEAD, VALVES AND PTFE VALVE BALLS.
2. DATA APPLIES TO WATER AT 16°C (61°F) AND 3 FT SUCTION LIFT CONDITIONS
3. PUMP CURVES ARE NORMALISED
4. THIS IS A TYPICAL REPRESENTATION OF PUMP CAPACITIES, HOWEVER ACTUAL PERFORMANCE MAY VARY BASED ON VARIUOS FACTORS SUCH AS INSTALLATION CONDITIONS, LIQUID PUMPED, SUCTION HEAD, DISCHARGE PRESSURE, VALVE TYPE AND CONFIGURATIONS, PIPE LENGTHS/SCHEDULE AND OTHER LOCAL INSTALLATION CONDITIONS. IT IS RECOMMENDED THAT THE USER DOES PUMP CALIBRATION ONSITE DURING START UP. ALWAYS REFER TO CATALOGUE CAPACITIES PRIOR TO SIZING AND SELECTING APPROPRIATE PUMP.

WATER PROCESS SOLUTIONS

Unit 10
Mill Hall Business Estate
Aylesford
Kent
ME20 7JZ

www.waterprocesssolutions.com

Phone: +44 (0) 1622719945
email: enquiries@waterprocesssolutions.com

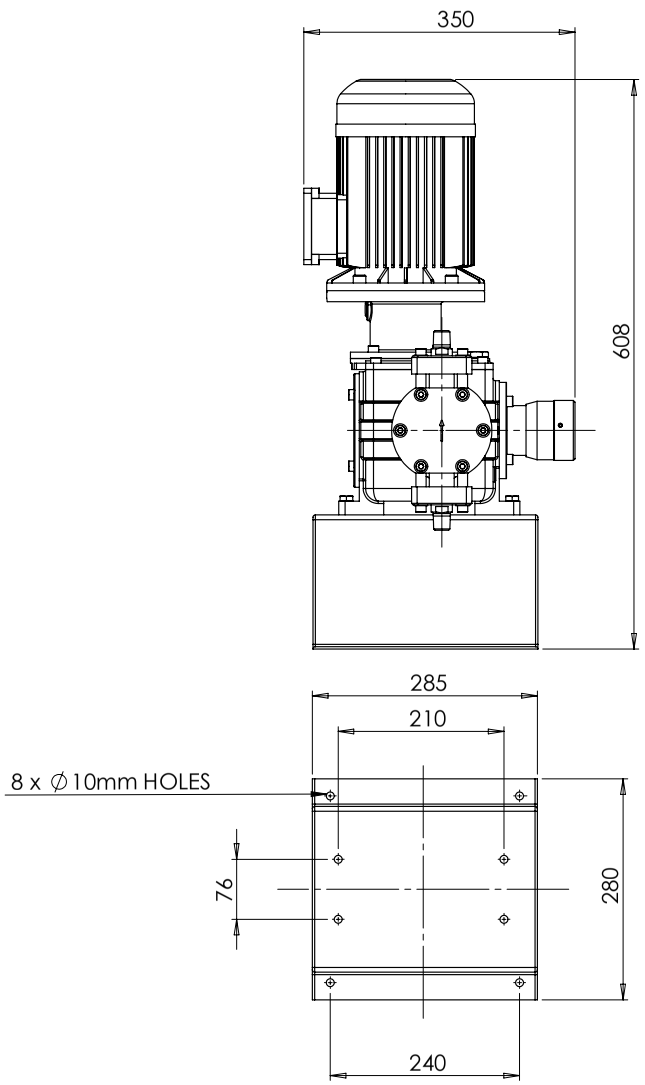

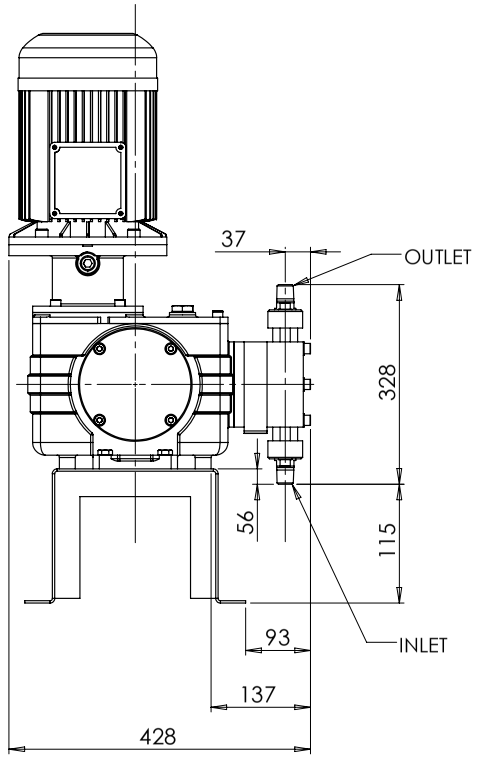

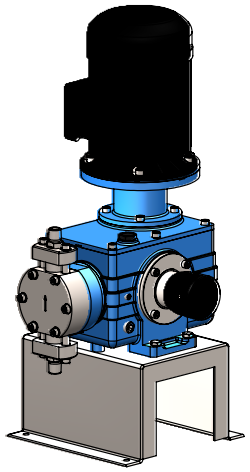

PUMP HEAD SIZE [MM]	INLET/OUTLET CONNECTIONS		WEIGHT [kg.]
	'PLAIN SOCKET'	'BSP'	
100	3/4" NB	3/4" BSP	56

THIRD ANGLE PROJECTION

	NAME	DATE
DRAWN BY	J.W	25/11/2016
CHK'D BY	T.F	25/11/2016
APP'V'D BY	T.F	25/11/2016

PUMP HEAD CONFIG. E7D - [4 INCH] [100MM]

TITLE: ENCORE 700 DIAPHRAGM PUMP - SIMPLEX MANUAL SPACE REQUIREMENTS

Water Process Solutions

UNLESS OTHERWISE SPECIFIED: DIMENSIONS: ALL IN MM. SURFACE FINISH: TOLERANCES: +/ - 0.1 mm

MATERIAL: [Refer to Config. BoM]

WEIGHT: 56 Kg

ISS NO. 01

PROJECT NO.

SCALE: 1 / 6

DWG NO. WPS-E7D

REVISION DATE: 25/11/2016

SHEET 1 OF 1

A3

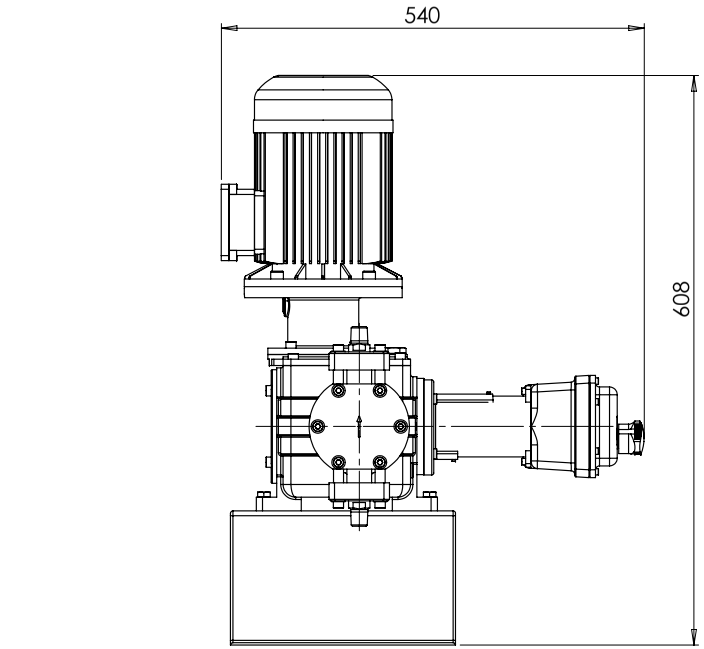

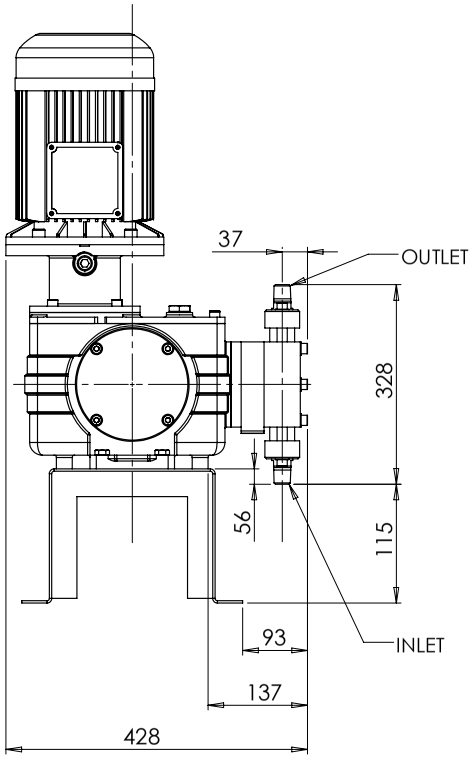

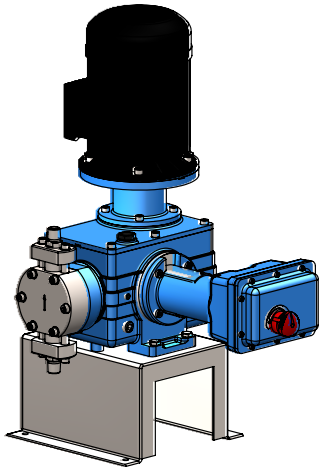

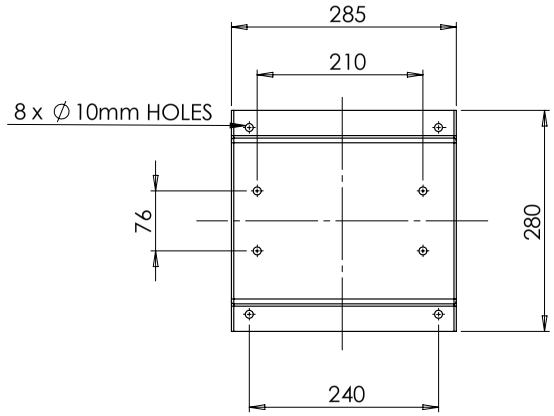

PUMP HEAD SIZE [MM]	INLET/OUTLET CONNECTIONS		WEIGHT [kg.]
	'PLAIN SOCKET'	'BSP'	
100	3/4" NB	3/4" BSP	56

THIRD ANGLE PROJECTION

	NAME	DATE
DRAWN BY	J.W	25/11/2016
CHK'D BY	T.F	25/11/2016
APP'V'D BY	T.F	25/11/2016

PUMP HEAD CONFIG.
E7D - [4 INCH]
[100MM]

TITLE:
ENCORE 700 DIAPHRAGM PUMP
- SIMPLEX ESP SPACE REQUIREMENTS

Water Process Solutions

UNLESS OTHERWISE SPECIFIED:
DIMENSIONS: ALL IN MM.
SURFACE FINISH:
TOLERANCES: +/ - 0.1 mm

MATERIAL: [REFER TO CONFIG. BoM]
WEIGHT: 56 kg

ISS NO. 01

PROJECT NO.

SCALE: 1 / 6

DWG NO. WPS-E7D-ESP

REVISION DATE: 25/11/2016

SHEET 1 OF 1

A3

WPS Ltd. Encore 700 Diaphragm Metering Pump 5” (125 mm) Head 50 Hz Pump Curve

NOTE: All Figures relate to 5 BAR pressure

PUMP CONFIGURATION CODE: E7E

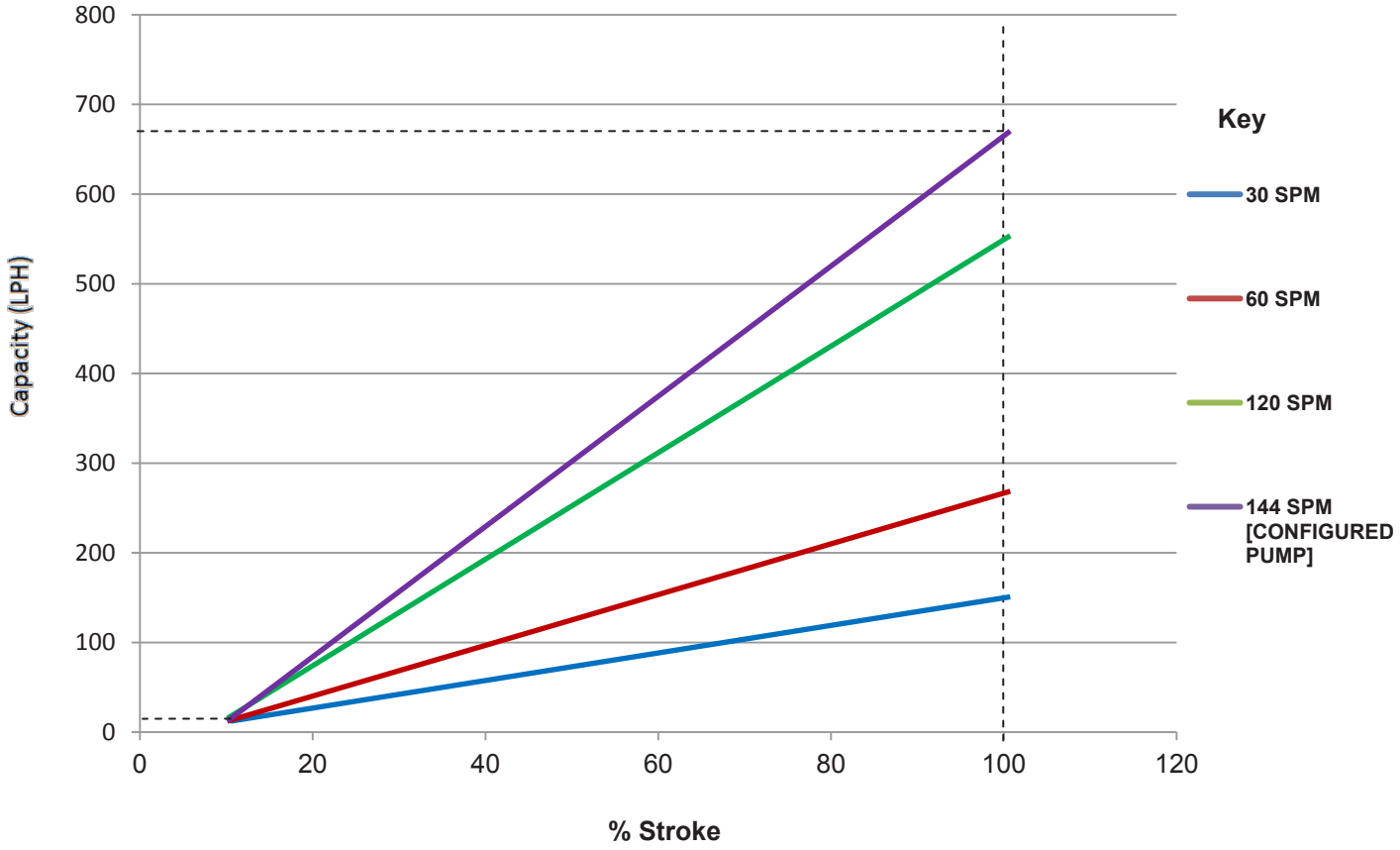

SPM (Strokes Per Minute)	Capacity LPH (Litres per Hour) at 100%
30	141.9
60	283.9
120	567.8
144	681.3

PUMP CURVE NOTES:

1. PUMP CONFIGURED WITH PVC HEAD, VALVES AND PTFE VALVE BALLS.
2. DATA APPLIES TO WATER AT 16°C (61°F) AND 3 FT SUCTION LIFT CONDITIONS
3. PUMP CURVES ARE NORMALISED
4. THIS IS A TYPICAL REPRESENTATION OF PUMP CAPACITIES, HOWEVER ACTUAL PERFORMANCE MAY VARY BASED ON VARIUOS FACTORS SUCH AS INSTALLATION CONDITIONS, LIQUID PUMPED, SUCTION HEAD, DISCHARGE PRESSURE, VALVE TYPE AND CONFIGURATIONS, PIPE LENGTHS/SCHEDULE AND OTHER LOCAL INSTALLATION CONDITIONS. IT IS RECOMMENDED THAT THE USER DOES PUMP CALIBRATION ONSITE DURING START UP. ALWAYS REFER TO CATALOGUE CAPACITIES PRIOR TO SIZING AND SELECTING APPROPRIATE PUMP.

WATER PROCESS SOLUTIONS

Unit 10
Mill Hall Business Estate
Aylesford
Kent
ME20 7JZ

www.waterprocesssolutions.com

Phone: +44 (0) 1622719945
email: enquiries@waterprocesssolutions.com

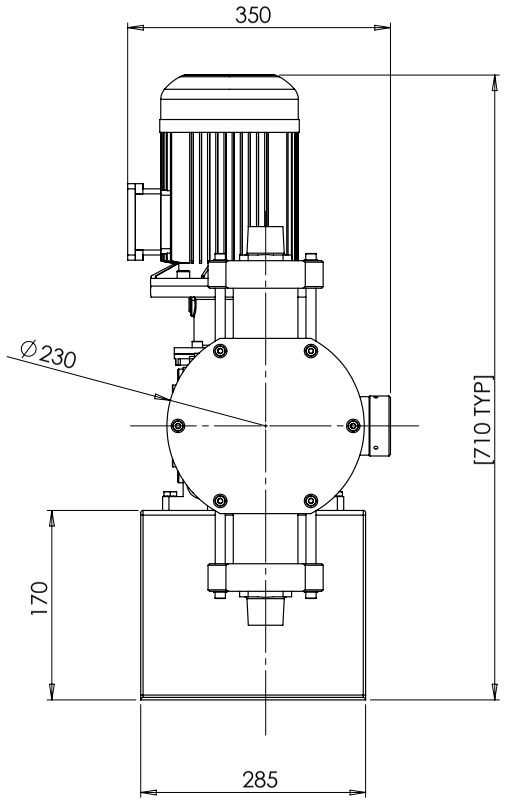

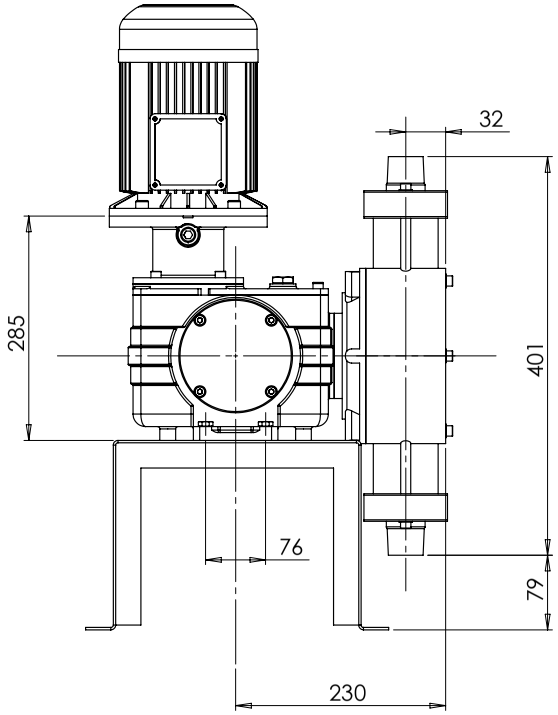

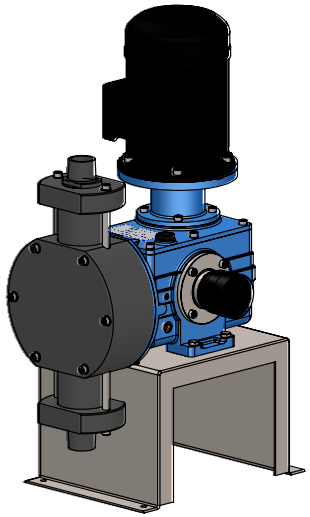

NOTE: THE DATUM POINT ON THE HEAD IS THE FLAT SURFACE FACE. THE DIMENSIONS ARE TAKEN FROM THIS POINT AND NOT FROM THE HEAD OF THE BOLT.

PUMP HEAD SIZE [MM]	INLET/OUTLET CONNECTIONS		WEIGHT [kg.]
	'PLAIN SOCKET'	'BSP'	
125	1" NPT	1" BSP	58

THIRD ANGLE PROJECTION

	NAME	DATE
DRAWN BY	J.W	02/03/2017
CHK'D BY	T.F	02/03/2017
APP'V'D BY	T.F	02/03/2017

PUMP HEAD CONFIG. E7E - [5 INCH] [125MM]

TITLE: ENCORE 700 DIAPHRAGM PUMP - SIMPLEX MANUAL SPACE REQUIREMENTS

Water Process Solutions

UNLESS OTHERWISE SPECIFIED: DIMENSIONS: ALL IN MM. SURFACE FINISH: TOLERANCES: +/ - 0.1 mm

MATERIAL: [Refer to Config. BoM]

WEIGHT: 58 Kg

ISS NO. 01

PROJECT NO.

SCALE: 1 / 6

DWG NO. WPS-E7E

REVISION DATE: 02/03/2017

SHEET 1 OF 1

A3

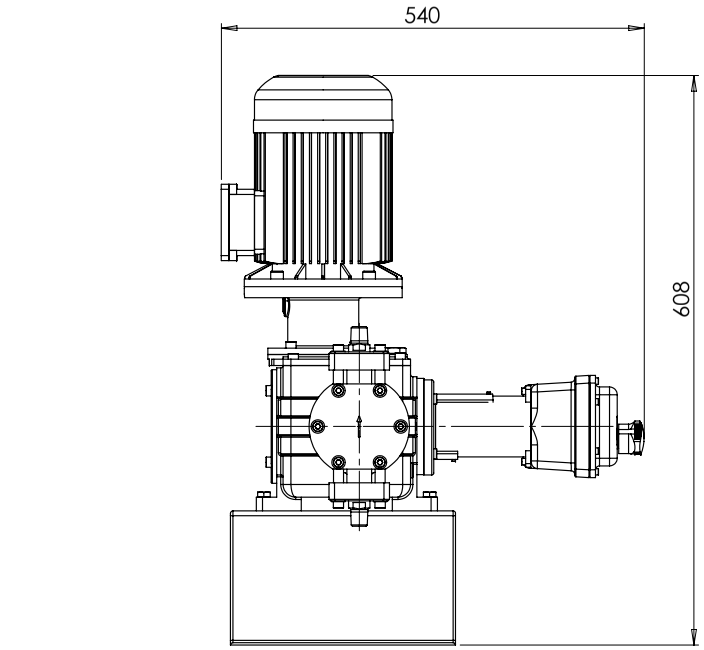

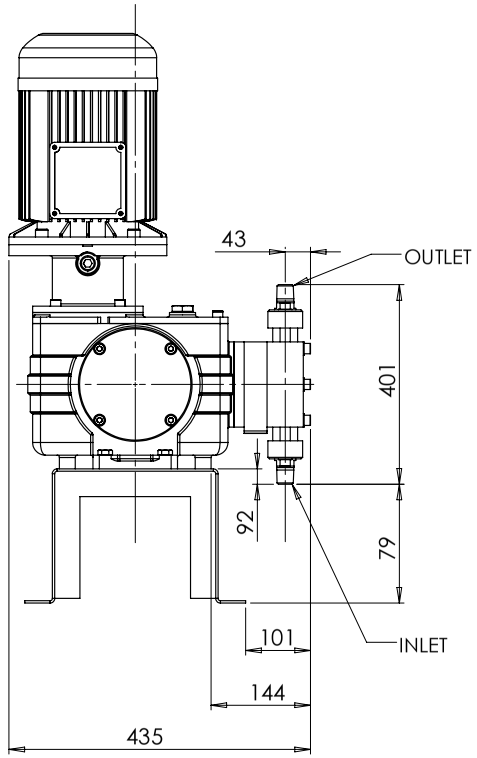

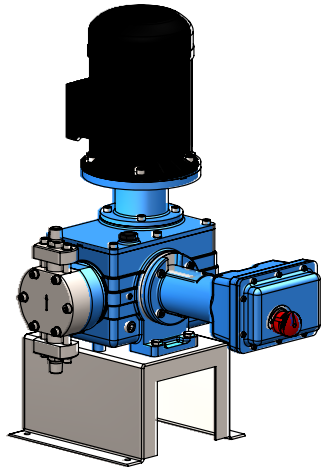

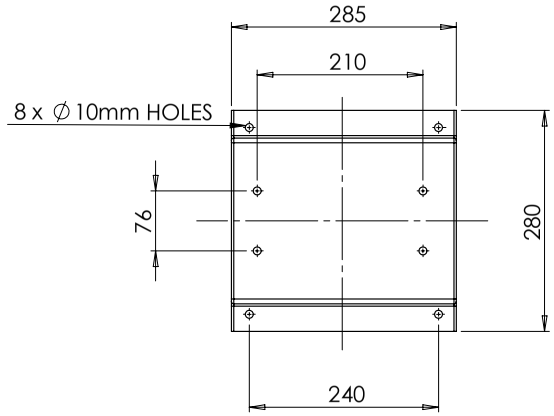

PUMP HEAD SIZE [MM]	INLET/OUTLET CONNECTIONS		WEIGHT [kg.]
	'PLAIN SOCKET'	'BSP'	
125	1" NB	1" BSP	58

THIRD ANGLE PROJECTION

	NAME	DATE
DRAWN BY	J.W	25/11/2016
CHK'D BY	T.F	25/11/2016
APP'V'D BY	T.F	25/11/2016

PUMP HEAD CONFIG.
E7E - [5 INCH]
[125MM]

TITLE:
ENCORE 700 DIAPHRAGM PUMP
- SIMPLEX ESP SPACE REQUIREMENTS

Water Process Solutions

UNLESS OTHERWISE SPECIFIED:
DIMENSIONS: ALL IN MM.
SURFACE FINISH:
TOLERANCES: +/ - 0.1 mm

MATERIAL: [REFER TO CONFIG. BoM]
WEIGHT: 58 kg

ISS NO. 01

PROJECT NO.

SCALE: 1 / 6

DWG NO. WPS-E7E-ESP

REVISION DATE: 25/11/2016

SHEET 1 OF 1

A3

WPS Ltd. Encore 700 Diaphragm Metering Pump 6 1/2” (165 mm) Head 50 Hz Pump Curve

Note: All Figures relate to 3 BAR pressure

PUMP CONFIGURATION CODE: E7Q

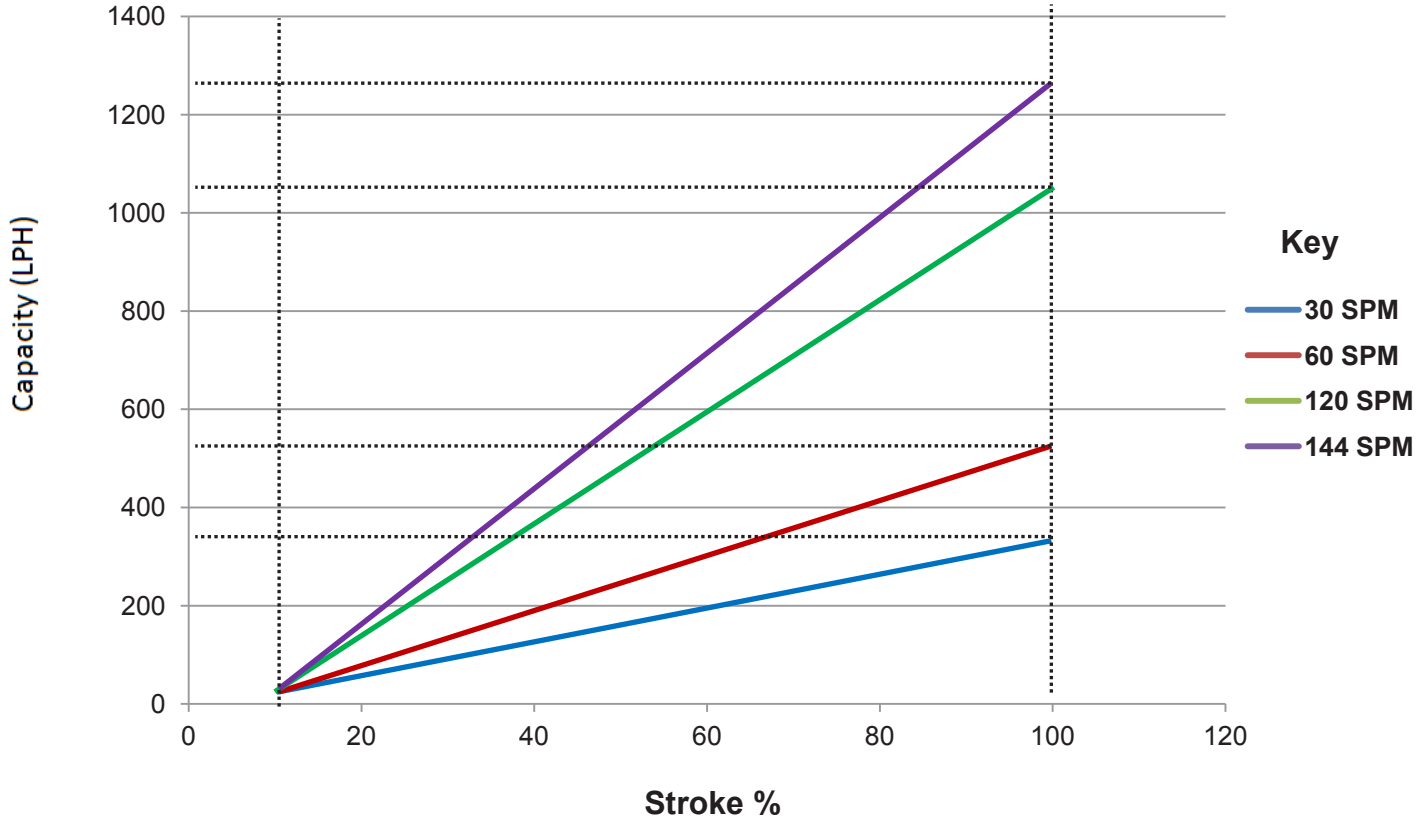

SPM (Strokes Per Minute)	Capacity LPH (Litres per Hour) at 100%
30	260
60	520
120	1040
144	1250

PUMP CURVE NOTES:

1. PUMP CONFIGURED WITH PVC HEAD, VALVES AND PTFE VALVE BALLS.
2. DATA APPLIES TO WATER AT 16°C (61°F) AND 3 FT SUCTION LIFT CONDITIONS
3. PUMP CURVES ARE NORMALISED
4. THIS IS A TYPICAL REPRESENTATION OF PUMP CAPACITIES, HOWEVER ACTUAL PERFORMANCE MAY VARY BASED ON VARIUOS FACTORS SUCH AS INSTALLATION CONDITIONS, LIQUID PUMPED, SUCTION HEAD, DISCHARGE PRESSURE, VALVE TYPE AND CONFIGURATIONS, PIPE LENGTHS/SCHEDULE AND OTHER LOCAL INSTALLATION CONDITIONS. IT IS RECOMMENDED THAT THE USER DOES PUMP CALIBRATION ONSITE DURING START UP. ALWAYS REFER TO CATALOGUE CAPACITIES PRIOR TO SIZING AND SELECTING APPROPRIATE PUMP.

WATER PROCESS SOLUTIONS

Unit 10
Mill Hall Business Estate
Aylesford
Kent
ME20 7JZ

www.waterprocesssolutions.com

Phone: +44 (0) 1622719945
email: enquiries@waterprocesssolutions.com

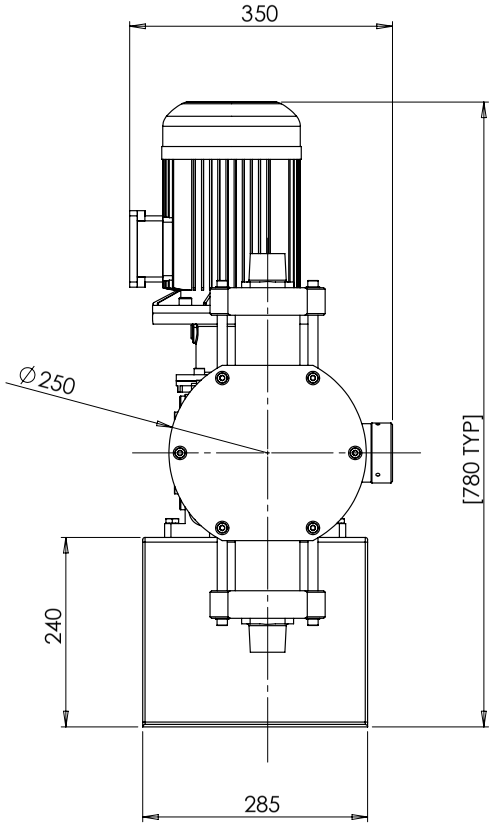

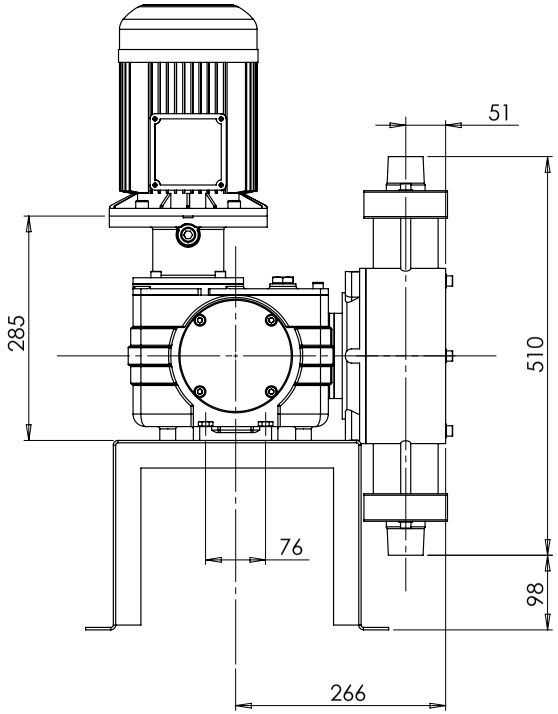

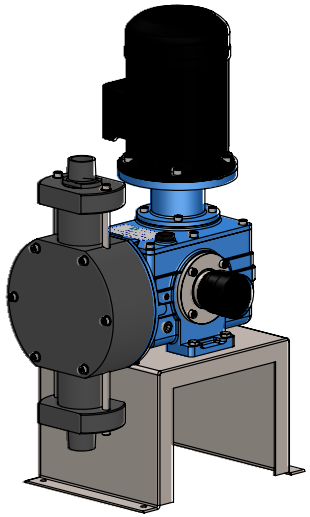

NOTE: THE DATUM POINT ON THE HEAD IS THE FLAT SURFACE FACE. THE DIMENSIONS ARE TAKEN FROM THIS POINT AND NOT FROM THE HEAD OF THE BOLT.

PUMP HEAD SIZE [MM]	INLET/OUTLET CONNECTIONS		WEIGHT [kg.]
	'NPT'	'NPT'	
165	1.5" NPT	1.5" NPT	60

THIRD ANGLE PROJECTION

	NAME	DATE
DRAWN BY	J.W	02/03/2017
CHK'D BY	T.F	02/03/2017
APP'V'D BY	T.F	02/03/2017

PUMP HEAD CONFIG. E7Q - [6.5 INCH] [165MM]

TITLE: ENCORE 700 DIAPHRAGM PUMP - SIMPLEX MANUAL SPACE REQUIREMENTS

Water Process Solutions

UNLESS OTHERWISE SPECIFIED: DIMENSIONS: ALL IN MM. SURFACE FINISH: TOLERANCES: +/ - 0.1 mm

MATERIAL: [Refer to Config. BoM]

WEIGHT: 60 Kg

ISS NO. 01

PROJECT NO.

SCALE: 1 / 6

DWG NO. WPS-E7Q

REVISION DATE: 02/03/2017

SHEET 1 OF 1

A3

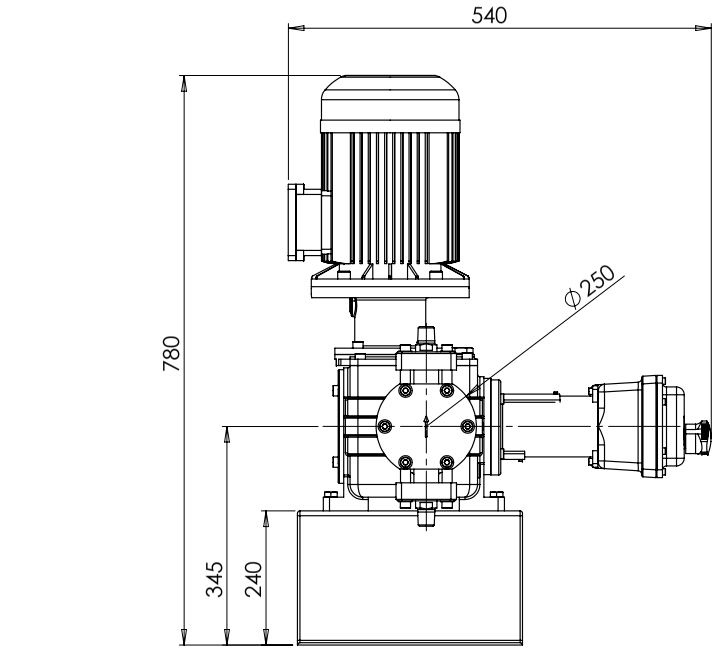

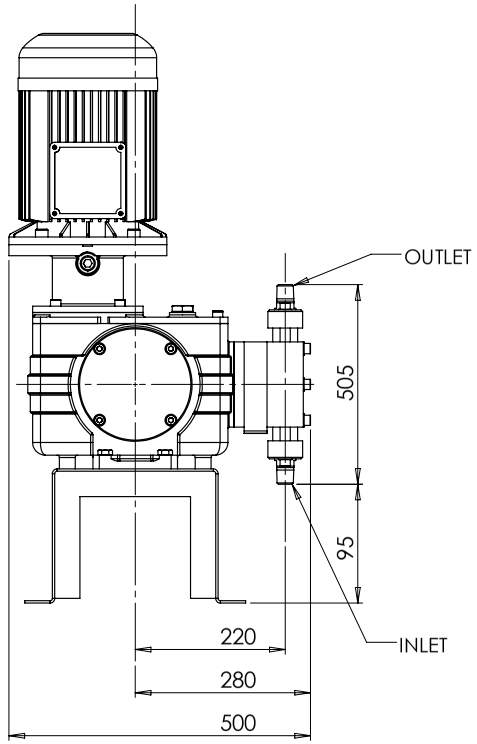

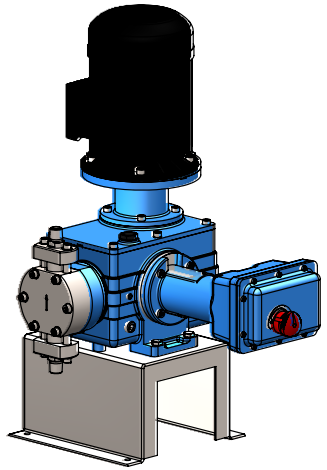

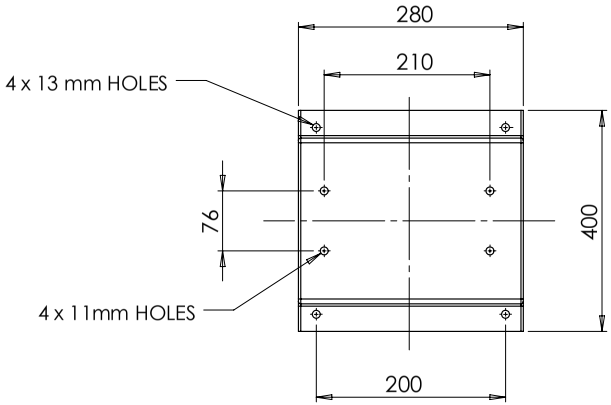

PUMP HEAD SIZE [MM]	INLET/OUTLET CONNECTIONS		WEIGHT [kg.]	
	'PLAIN SOCKET'	'BSP'	PVC HEAD	316SS HEAD
165	1.5" NB	1.5" BSP	60	113

THIRD ANGLE PROJECTION

	NAME	DATE
DRAWN BY	J.W	25/11/2016
CHK'D BY	T.F	25/11/2016
APP'V'D BY	T.F	25/11/2016

PUMP HEAD CONFIG.
E7Q - [6.5 INCH]
[165MM]

TITLE:
ENCORE 700 DIAPHRAGM PUMP
- SIMPLEX ESP SPACE REQUIREMENTS

Water Process Solutions

UNLESS OTHERWISE SPECIFIED:
DIMENSIONS: ALL IN MM.
SURFACE FINISH:
TOLERANCES: +/ - 0.1 mm

MATERIAL: [REFER TO CONFIG. BoM]
WEIGHT: -

ISS NO. 01

PROJECT NO.

SCALE: 1 / 6

DWG NO. WPS-E7Q-ESP

REVISION DATE: 25/11/2016

SHEET 1 OF 1

A3

www.waterprocesssolutions.com
enquiries@waterprocesssolutions.com

Water-Process-Solutions

@waterwps

Water Process Solutions Ltd
Unit 10,
Mill Hall Business Estate,
Aylesford,
Kent, ME20 7JZ

WATER PROCESS SOLUTIONS

Sales Literature No. WPSSL0101
Revision No. 1 12/08/2019